IF IN DOUBT ASK
DO NOT SCALE

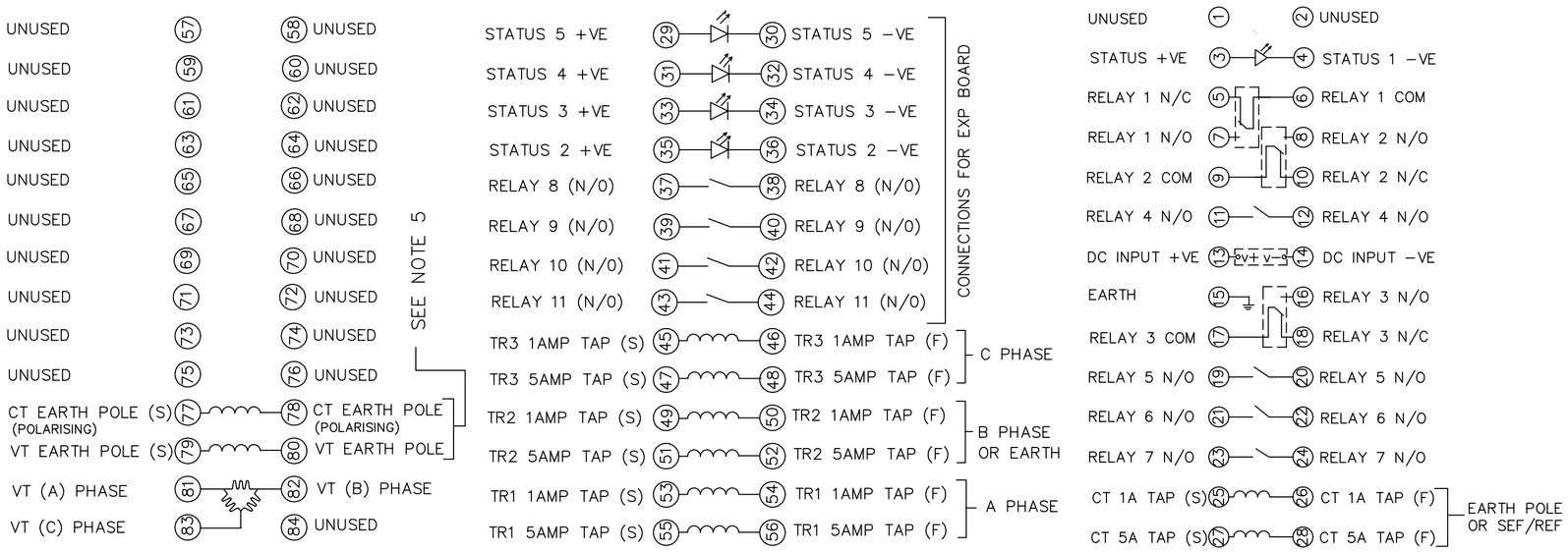

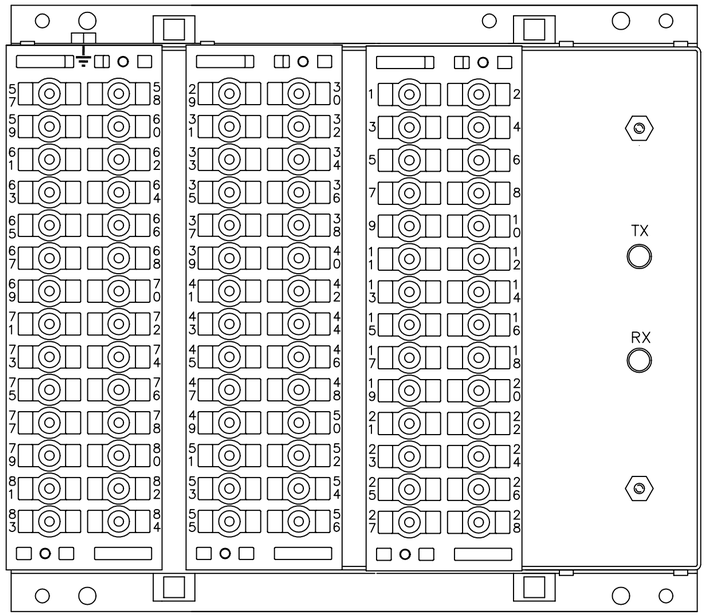

BOX VIEWED FROM REAR

OUTER TERMINAL BLOCK ASSY:−
VIEW BLOCK FROM THE INSIDE FACE
ASSEMBLY INSTRUCTIONS:−

TYPICAL ASSEMBLY DRAWING 2995G10029
AT INDICATED POSITIONS FIT AS FOLLOWS,
S − FIT STANDARD CONTACT
2995B10051
HC − FIT 'HEAVY CURRENT' KIT
2995G10030
WHERE -o o- IS SHOWN FIT
CT SHORTING KIT 2995G10031
POSITIONS SHOWN BLANK ARE UNUSED
ALL POSITIONS FIT SCREW 2106F12506

58			57
60			59
62			61
64			63
66			65
68			67
70			69
72			71
74			73
76			75
78	-o o-		77
80	S	S	79
82	S	S	81
84	S	S	83

OUTER TERMINAL BLOCK ASSY:−
VIEW BLOCK FROM THE INSIDE FACE
ASSEMBLY INSTRUCTIONS:−

TYPICAL ASSEMBLY DRAWING 2995G10029
AT INDICATED POSITIONS FIT AS FOLLOWS,
S − FIT STANDARD CONTACT
2995B10051
HC − FIT 'HEAVY CURRENT' KIT
2995G10030
WHERE -o o- IS SHOWN FIT
CT SHORTING KIT 2995G10031
POSITIONS SHOWN BLANK ARE UNUSED
ALL POSITIONS FIT SCREW 2106F12506

30	S	S	29
32	S	S	31
34	S	S	33
36	S	S	35
38	S	S	37
40	S	S	39
42	S	S	41
44	S	S	43
46	-o o-		45
48	-o o-		47
50	-o o-		49
52	-o o-		51
54	-o o-		53
56	-o o-		55

OUTER TERMINAL BLOCK ASSY:−
VIEW BLOCK FROM THE INSIDE FACE
ASSEMBLY INSTRUCTIONS:−

TYPICAL ASSEMBLY DRAWING 2995G10029
AT INDICATED POSITIONS FIT AS FOLLOWS,
S − FIT STANDARD CONTACT
2995B10051
HC − FIT 'HEAVY CURRENT' KIT
2995G10030
WHERE -o o- IS SHOWN FIT
CT SHORTING KIT 2995G10031
POSITIONS SHOWN BLANK ARE UNUSED
ALL POSITIONS FIT SCREW 2106F12506

2	S	S	1
4	S	S	3
6	-o o-		5
8	S	S	7
10	-o o-		9
12	S	S	11
14	S	S	13
16	S	S	15
18	-o o-		17
20	S	S	19
22	S	S	21
24	S	S	23
26	-o o-		25
28	-o o-		27

CHASSIS TERMINAL BLOCK ASSY:−
VIEW FROM NUMBERED SIDE OF BLOCK

ASSEMBLY INSTRUCTIONS:−

TYPICAL ASSEMBLY DRAWING 2995G10032
AT INDICATED POSITIONS FIT AS FOLLOWS,
T − FIT TRIP ISOLATION CONTACT
2995B10053
S − FIT STANDARD CONTACT
2995B10054
POSITIONS SHOWN BLANK ARE UNUSED

2			1
4			3
6			5
8			7
10			9
12			11
14			13
16			15
18			17
20			19
22	S	S	21
24	S	S	23
26	S	S	25
28	S	S	27

CHASSIS TERMINAL BLOCK ASSY:−
VIEW FROM NUMBERED SIDE OF BLOCK

ASSEMBLY INSTRUCTIONS:−

TYPICAL ASSEMBLY DRAWING 2995G10032
AT INDICATED POSITIONS FIT AS FOLLOWS,
T − FIT TRIP ISOLATION CONTACT
2995B10053
S − FIT STANDARD CONTACT
2995B10054
POSITIONS SHOWN BLANK ARE UNUSED

2	T	T	1
4	T	T	3
6	T	T	5
8	T	T	7
10	T	T	9
12	T	T	11
14	T	T	13
16	T	T	15
18	S	S	17
20	S	S	19
22	S	S	21
24	S	S	23
26	S	S	25
28	S	S	27

CHASSIS TERMINAL BLOCK ASSY:−
VIEW FROM NUMBERED SIDE OF BLOCK

ASSEMBLY INSTRUCTIONS:−

TYPICAL ASSEMBLY DRAWING 2995G10032
AT INDICATED POSITIONS FIT AS FOLLOWS,
T − FIT TRIP ISOLATION CONTACT
2995B10053
S − FIT STANDARD CONTACT
2995B10054
POSITIONS SHOWN BLANK ARE UNUSED

2	S	S	1
4	T	T	3
6	S	S	5
8	T	T	7
10	S	S	9
12	T	T	11
14	S	S	13
16	T	S	15
18	S	S	17
20	T	T	19
22	T	T	21
24	T	T	23
26	S	S	25
28	S	S	27

PROTECTION TYPE	SCHEMATIC DIAGRAM
3 PHASE(DIR)+EARTH(DIR)	2716W10010 (A3)
3 PHASE(DIR)+EARTH	
3 PHASE(DIR)+SEF	2716W10011 (A3)

NOTES

1 TERMINALS RECOMMENDED ARE PRE INSULATED & MUST BE CRIMPED USING APPROVED TOOLING.
AMP PIDG OR PLASTI GRIP FUNNEL ENTRY (RING TONGUE) FOR M4 FIXING STUD.

SUPPLIER	AMP	CABLE SIZE
AMP	342103	0.25−1.6 SQ MM
AMP	342143	1.0−2.6 SQ MM.

OR ANY OTHER MANUFACTURERS EQUIVALENT TERMINAL.

2 FOR OUTLINE & DRILLING DRG SEE 2995X10008 (A4).
3 CT OR VT POLARISATION IS AVAILABLE
(FOR CLARITY DRG SHOWS BOTH VT & CT TERMINATIONS)

NOT SUBJECT TO UPDATE ONCE COPIED / PRINTED OR DOWNLOADED

ISSUE	DATE	CHANGE NOTED
3	19/4/02	MN434/2292
2	22/11/99	MN434/150
1	20/5/99	

Copyright © 1999 Reyrolle Ltd.

MATERIAL:

Dimensions in millimetres ; Surface texture in micrometres.
Machine where marked ∀
For explanation of dimensions, tolerances, notes etc. see B.S.308.
Limit on untoleranced unmachined dimensions ± _____
Limits on untoleranced machined dimensions to B.S.4500;
i.e. up to 6±0.1; over 30 to 120±0.3; over 315±0.8;
over 6 to 30±0.2; over 120 to 315±0.5;
General unmachined angular tolerance ± _____

Finish:
Treatment:

Title: TERMINAL IDENTIFICATION & RELAY WIRING DIAGRAM 4 POLE DIRECTIONAL GAF ARGUS 5&6) RELAY (E8 CASE)

Reyrolle Protection Hebburn.

Original Scale. 1:1

First used on:
Similar Articles:
Supersedes:
Drg. No. 2716W50002

DRAWN	CHECKED	APPROVED	DATE	IE	OPS	PCP	Purch.Spec.	TQ	EAC	CE	STD	A2
M LEASK		R.D.WATSON	15/07/02									

SIEMENS
siemens-russia.com